MILLSTAR
JIUH-YEH

VERTICAL MACHINING CENTER

BMV Box Way

850/1000/1200/1600/2200/2500

BV Box Way

60 / 80

COMPANY NAME JIUH-YEH
A7861 ISO9001:2008

ISO 9001:2015

MILLSTAR DEVELOPED FOR CHALLENGING VERTICAL OPERATIONS

BMV 850/1000/1200/1600

4 BOX WAYS BUILT FOR THOSE WHO REQUIRE HEAVY CUTTING AND OUT PUT

大四硬軌系列 提昇您的重切削加工能力 呈現更優質的成品

FOR HEAVY DUTY
BT-50 (Belt / Gear Head opt.)
BT-40 (Belt Drive)

BMV-850/1000
BT40

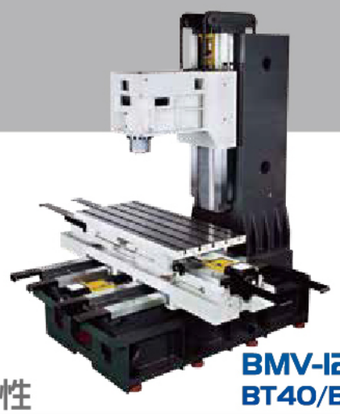

BMV-1200
BT40/BT50

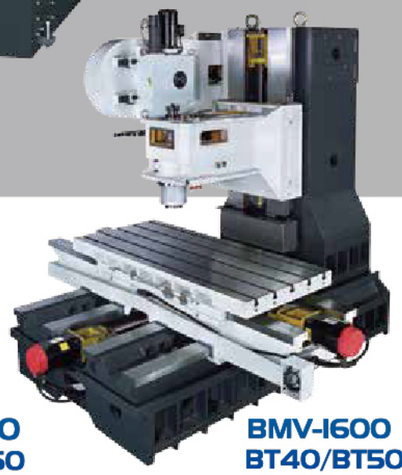

BMV-1600
BT40/BT50

/ FOUR BOX WAYS 四硬軌底座

- The massive base construction has 4 box ways. The wide way surfaces, combined with extra large span between box ways, provide firm heavy workpiece support.
- 厚實機台底座採四硬軌結構，寬大滑軌接觸面加上較大跨距，提供大型工件穩固支撐。

/ DOUBLE SCREW TYPE CHIP CONVEYOR 雙螺旋排屑裝置 (BMV-1600)

/ FEATURES 機械特性

- Machine is made of Meehanite Casting with internal ribs runing throughout each section, featuring long term metallic rigidity and stability.
- The 4 slideways design base is a one piece casting, the slideways are coated with Turcite B, and all mating surfaces are precision hand scraped to increase the flatness and improve geometric accuracy of the whole assembly.
- Air curtain function prevents cutting chip and coolant from damaging spindle bearing.
- High precision ball screws on three axes are pre-loaded to eliminate thermal displacement. The ball screws are modularly assembled, the parallelism and squareness accuracy are calibrated within +/- 0.01 mm. in full length.
- LASER Check, Ball Bar Test and Spindle Dynamic Balance are performed to ensure the optimum static dynamic accuracy.

- 機器以米漢納鑄鐵製成，各主要結構內部為內肋強化之箱型設計，確保長時間金屬剛性及穩定度。
- 一體成型底座四滑軌設計，並貼以滑道襯墊Turcite B，主要精度接合面都精密鏟花，提昇機台整體之平面度及幾何精度。
- 空氣氣簾有效保護主軸避免鐵屑及切削液損壞主軸軸承。
- 三軸預拉高精密滾珠螺桿能有效消除熱變位問題，模組化組裝，確保螺桿在機器全行程內之平行度及直角度都在 ±0.01 mm 之範圍。
- 雷射、循圓及主軸動態平衡校正確保機器最佳靜態及動態精度。

- Floating tool knocking (BT-50)
- Air blast curtain around spindle prevents chips entering and protects bearings (optional)
- Coolant jet around the spindle end provides effective cooling on workpieces (optional)
- Major casting parts are box-type in structure for outstanding rigidity and stability.
- The standardly equipped heat exchanger features excellent heat dissipation that reduces the possibility of trouble and extends the service life of the electronic components.
- A laser unit, ball bar tester and spindle dynamic balance tester are employed to ensure high precision,superior dynamic and static accuracy and machining quality.
- Chip flushing devices on both sides combined with a screw chip conveyor, allow chips to be delivered to the front chip tank.
- Uniform lubrication points on the slideways. A volumetric oil distributor is employed for uniform lubrication on all slideways.

- 浮動打刀 (BT-50)。
- 在主軸外圍周設氣幕吹淨，防止切削入侵可保護軸承(選配)。
- 主軸前端環狀沖屑，使加工物達到最好冷卻效果(選配)。
- 機體鑄件皆採用箱形結構，剛性與穩定性特佳。
- 熱交換器為標準附件，散熱效率佳，可降低故障率及延長內部電子元件的壽命。
- 使用雷射定位儀、循圓切削測試裝置及主軸動平衡校正儀等來實際檢驗，以確保機器動態、靜態與加工精度。
- 兩側沖削系統搭配螺旋式除屑裝置，可將切屑排至前方之鐵屑箱內。
- 滑軌潤滑點平均分配佈置，採用容積式配油器，各注油點均等，確保滑動面潤滑均勻。

MILLSTAR JUH-YEH

BMV 四硬軌立式綜合加工機
4 BOX WAY BUILT FOR THOSE WHO R

BMV 2200/2500

6 BOX WAYS EXTRA HEAVY DUTY & LOADING MACNINING

重型六硬軌 締造加工中心機穩定性極致

/ Work Table :
2400 x 1000 mm (2200)
2700 x 1000 mm (2500)

/ X / Y / Z (2200) : 2200 x 1100 x 900 mm
/ X / Y / Z (2500) : 2500 x 1100 x 900 mm
/ Work Piece Max. loading : 3500 kg

/ FEATURES 機械特性

- The gear-type spindle is transmitted by a gearbox with high/low speed change, featuring greater torque for heavy duty machining.
- Massive base weighs 9 tons combined with extra wide 6 box ways (span between ways up to 2,800 mm) providing solid support for the entire machine. 25-ton total machine weight features unmatched structural rigidity.
- Big table surface measures 2,400 (L) x 1,000 (W) mm permitting maximum load up to 3,500 kgs, making the machine ideal for medium and large mold machining. (L x W : 2,200 mm x 1,000 mm)
- Extra large Y-axis (1,110 mm) and throat depth (1,050 mm) provides increased working capacity.
- Comprehensive Chip Removal System : Two chip augers are provided at the right and left side of the machine combined with powerful flushing device and screw-type or link chain-type (optional) chip conveyor at front of the machine. All these ensure that the machine is clean at all times.

- 齒輪式主軸採用高低速變換齒輪箱傳動，提供更高的扭力輸出，耐重切削加工。
- 重達九噸的底座結構與超大跨距六硬軌設計(跨距寬達2800 mm)，提供全機最佳的支撐穩定性。機台總重量25噸重，提供整機最佳的剛性結構。
- 大面積工作台設計 : 2400 mm (L) x 1000 mm (W) (Model : 2200)；2700 mm (L) x 1000 mm (W) (Model : 2500)，最大負重可達3500 kgs，適合中大型模具業之精密加工。
- 超大Y軸(1100 mm)與喉深(1050 mm)設計，提供客戶較大的加工範圍。(長 x 寬 : 2,200 mm x 1,100 mm)
- 完善的除屑系統：左右雙螺旋除屑螺桿，配合左右兩邊之強力沖屑裝置與機械前面的螺旋或履帶式(選配)切屑輸送機，隨時確保機台之清潔。

/ EXTRA HEAVY 6 WAY BASE 超大噸位 六軌式底座

- The oversized base structure weight 9 tons with 6-ways on the base to achieve the best possible stability for heavy workpieces. It fully eliminates overhang problems on the table travel, while assuring deformation-free operations, year after year.
- 總重高達9噸的超大底座，搭配6軌式硬軌，對於大型工件展現最佳的穩定性。工作台全行程移動無懸垂問題，結構長久不變形。

MILLSTAR JUH-YEH
BMV 重型六硬軌立式綜合加工機
EXTRA HEAVY 6 BOX WAY BUILT FOR

BV 60/80

2 BOX WAYS

立式加工中心機 二硬軌系列

/ FEATURES 機械特性

- Machine is made of Meehanite Casting with internal ribs running throughout each section, featuring long term metallic rigidity and stability.
- The 4 slide ways design (1400-2000) base is a one piece casting, the slide ways are coated with Turcite B, and all mating surfaces are precision hand scraped to increase the flathness and improve geometric accuracy of the whole assembly.
- High precision ball screws (C3 class) on 3 axes are pre-loaded to eliminate thermal displacement. The ball screws are modularly assembled, the parallelism and squareness accuracy are calibrated within ±0.01 mm, in full length.
- Laser check, ball screw test and spindle dynamic balance are performed to ensure the optimum static and dynamic accuracy.
- Linear type use precision Roller type linear way (LV1400-2000).
- Durable hardened-treatment for Box type guide ways (BV series).
- ATC arm type 24 tools (std.) for 1400-2000.
- Under 1500A model can shipment by 40"HQ container.

- 超寬穩重的底座結構具有四線軌，提供整機的穩固支撐能力。
- 主要機體鑄件為箱形結構，保證最佳機械剛性與加工穩定性。
- 三軸精密滾珠螺桿經預拉處理，以消除熱變位確保高重覆精度。
- 精密滾珠螺桿為模組化組裝。滾珠螺桿之平行度與垂直度經精密校準到0.01 mm (全長)以內。
- 配重塊以導軌型式支撐，減低震動，提升加工性能。

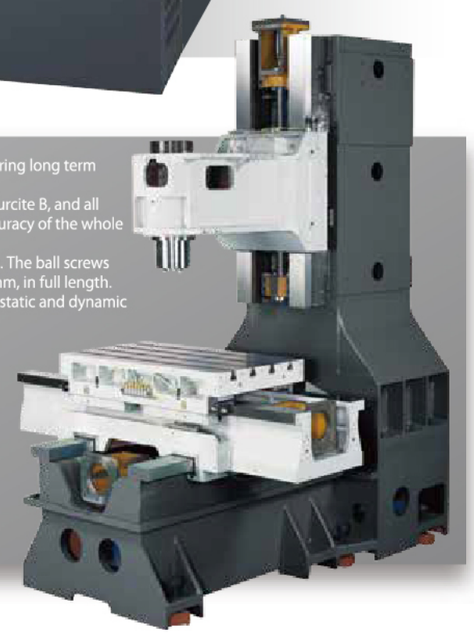

/ JAPAN HAMADA

HIGH PRECISION HIGH/LOW SPEED GEAR HEAD (OPT.)

日本濱田 高低速變換齒輪頭(選配)

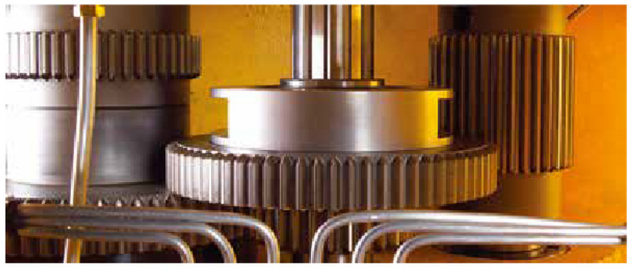

/ HIGH TORQUE GEAR BOX (OPT.)
高扭力齒輪頭

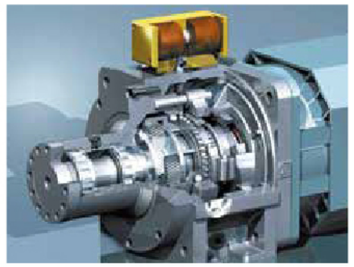

/ HIGH TORQUE ZF GEAR BOX (OPT.)
高扭力ZF齒輪箱 (適用BT-40選配)

/ SPINDLE FEATURES 主軸特性

- The spindle is supported by P4 class precision angular contact ball bearings, featuring superior radial and axial thrust capacity.
- The spindle is carefully assembled by highly experienced thchnicians and tested long time before mounting to the machine.
- The spindle is available to equip with an optional "coolant through spindle" device which effectively reduces spindle temperature growth while increasing chip flushing effect. (OPT.)
- Coolants jets around spindle. (OPT.)
- 主軸採用P4級精密斜角滾珠軸承，徑向及軸向止推力優異。
- 主軸由專業技術員組裝，裝配到機器經長時間運轉測試。
- 主軸可依客戶需求增加"主軸中心出水"功能，有效降低主軸溫昇及沖屑效果 (選配)。
- 主軸環狀噴水 (選配)。

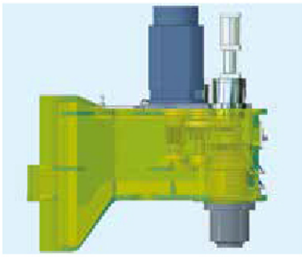

- 齒輪式主軸採用高低速變換齒輪箱傳動，提供更高扭力輸出耐重切削加工。
- 採用日本進口齒輪，具低噪音、高精度、耐磨耗及使用壽命長等特性。
- 齒輪箱採噴油式迴流過濾，確保輪滑油清潔。
- 高低速變換經由電腦控制。
- BT-40 轉速可達 8,000 rpm (ZF) / BT-50 轉速可達 6,000 rpm (GEAR HEAD)。

- The gear-type spindle is transmitted by a gearhead providing greater torque output for heavy duty machining.
- The gearhead consists of high quality gears imported from Japan which feature minimum noise, high accuracy, maximum wear resistance and long service life.
- The gearbox employs splashing type circulated filtration to keep lubrication oil clean.
- The high/low speed change is automatically controlled through the computer.
- Circulated cooling on motor base.
- 8,000 rpm for Bt-40 spindle. / 6,000 rpm for BT-50 spindle.

MILLSTAR JIUH-YEH

BMV 二硬軌/主軸/齒輪頭

2 BOX WAYS / SPINDLE / GEAR HEAD

/ QUALITY AND DEPENDABILITY THROUGH COMPREHENSIVE INSPECTIONS 完善嚴格的精度檢驗

/ Substantial Processing Test

/ Frequency / Balance detect

/ Work piece testing

/ Laser inspection is applied for every machine after installation to ensure perfect quality.

- 每座機台均以雷射進行定位校準，確保最佳品質。

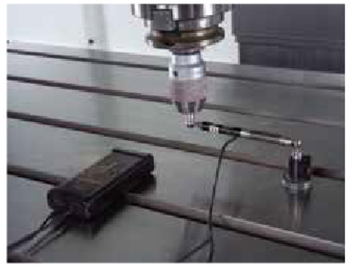

/ High precision ball bar circle inspection.

- 高精度循圓測試。

/ Dynamic Vibration Inspection

- 主軸動態振動檢驗。

/ SPINDLE OIL COOLER (STD.)

- 主軸油溫冷卻機 (標配)。

/ ELECTRICAL CONTROL BOX (COMPLIED WITH CE STANDARDS)

- 電器箱 (符合CE標準)。

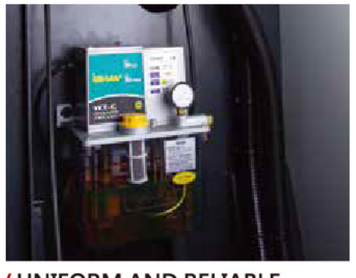

/ UNIFORM AND RELIABLE SLIDEWAY LUBRICATION

The machine is equipped with an oil distributor combined with uniform lubrication points to assure added uniformity of slideway lubrication. It results in extremely smooth axial movement.

- 更均勻、更可靠的滑道潤滑
  本機採用高性能配油器，配合滑道潤滑點平均分配設計，保證滑道面潤滑更均勻，行程動作順暢。

/ AUTOMATIC TOOL CHANGER 自動換刀機構

/ ARM TYPE MAGAZINE (STD.)

- The loading capacity for the arm-type magazine is 24 tools.
- The magazine accepts BT-40 / CAT40 or BT-50 / CAT-50 tool shanks.
- Tool selection method is bi-directional and random.

/ 刀臂式刀庫 (標配)

- 刀庫容量為24支刀
- 可使用BT-40 / CAT40 或 BT-50 / CAT-50刀柄規格。
- 選刀方式為雙向，任意選刀。

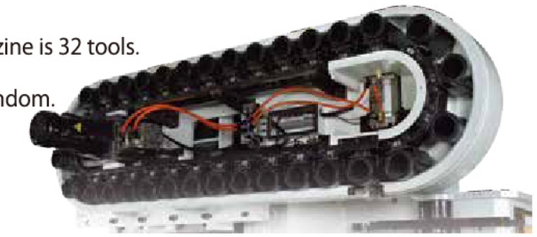

/ CHAIN TYPE MAGAZINE (OPT.)

- The loading capacity for the chain-type magazine is 32 tools.
- The magazine accepts BT-50 tool shanks.
- Tool selection method is bi-directional and random.

/ 鏈條式刀庫 (選配)

- 刀庫容量為32支刀。
- 可使用BT-50刀柄規格。
- 選刀方式為雙向，任意選刀。

/ COMPREHENSIVE CHIP FLUSHING DESIGN 齊全的沖屑設計

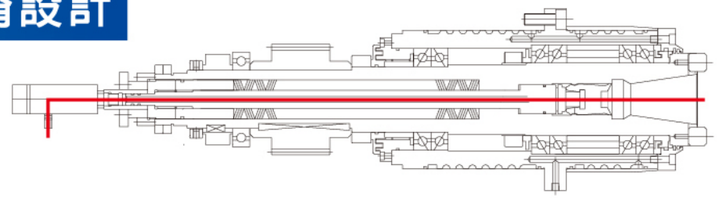

/ COOLANT THROUGH SPINDLE (OPT.)

- The specially-designed coolant through spindle device ensures constant temperature on the spindle and tool thereby increasing machining accuracy.

/ 主軸中心出水(選配)

- 特殊設計的主軸中心出水裝置，可確保主軸及刀具的常溫，提昇加工精度。

/ COOLANT GUN

- Replaces previous air gun, effectively prevents chips jumping into spindle and causing damage (opt.)

/ 冷卻液噴槍

- 此冷卻液噴槍可取代一般的空氣噴槍，可有效避免切屑侵入主軸，造成主軸損害。

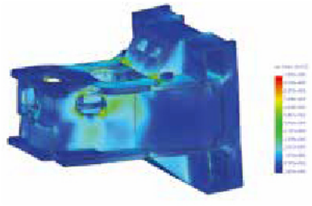

/ FINITE ELEMENT ANALYSIS

- The major structcral parts of MILLSTAR machines are all manufactured from high quality cast iron and tempered to relieve stress. In addition, high-tech 'Finite Element Analysis' is applied to simulate the stress/strain conditions throughout the computer. This will assure excellent machine rigidity, stability and dampening capabilities.

/ 有限元素分析

- 鉅業機械的主要結構鑄件，除了採用高級鑄鐵製成，經回火處理，消除內應力；再採用先進科技的有限元素分析，以電腦模擬結構應力情況，確保最佳的機械剛性、穩定性及抗震能力。

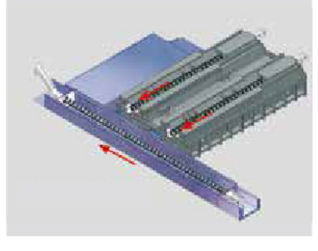

/ COMPREHENSIVE CHIP REMOVAL DESIGN (STD.)

- The chip augers provided at both sided of the base are combined with powerful chip flushing devices to deliver chips to the front-mounted chip conveyor. this keeps the machine clean at all times.

/ 完善的除屑系統

- 底座左右兩邊裝有除屑螺桿，配合兩邊之強力沖屑裝置，可將切屑輸送至機械前面的切削輸送機，再排出機外，隨時確保機械之清潔。1600~2500 (標配)

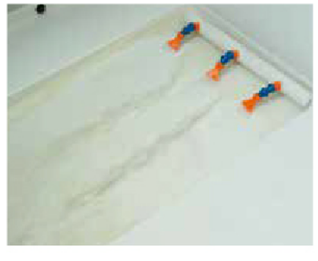

/ COOLANT FLUSHING DEVICE

- The high-pressure coolant flushing device provides efficirnt removal of chios.(opt.)

/ 高壓沖屑裝置

- 高壓沖屑裝置，具有強勁的沖屑能力。(選配)

MILLSTAR JUNHEH

BMV 精度檢驗 / 自動換刀機構 / 沖屑設計

INSPECTIONS / ATC / CHIP FLUSHING

BMV / BV Series / SPECIFICATIONS 機台規格表

型 式 / MODEL		BV-60	BV-80	BMV-850	BMV-1000	BMV-1200		BMV-1600		BMV-2200		BMV-2500	
TABLE 工作台	工作台尺寸 Work Table	800 x 450 mm	950 x 450 mm	1010 x 550 mm	1200 x 550 mm	1400 x 630 mm		1800 x 800 mm		2400 x 1000 mm		2700 x 1000 mm	
	T型槽 T-slot	100 x 18 mm x 4T	100 x 18 mm x 4T	100 x 18 mm x 5T	100 x 18 mm x 5T	125 x 18 mm x 5T		160 x 22 mm x 5T		160 x 22 mm x 6T		160 x 22 mm x 6T	
	最大負荷 Max. Loading	500 kg	600 kg	800 kg	1000 kg	1200 kg		2500 kg		3500 kg		3500 kg	
TRAVEL 行程	三軸行程 Three Axes Travel	660 x 480 x 450 mm	820 x 520 x 510 mm	850 x 600 x 620 mm	1000 x 600 x 620 mm	1200 x 600 x 650 mm		1600 x 900 x 700 mm		2200 x 1100 x 900 mm		2500 x 1100 x 900 mm	
	主軸鼻面至工作台面距離 Spindle Nose to Table Surface	200~650 mm	140~650 mm	130~750 mm	130~750 mm	150~800 mm (BT-40)	250~900 mm (BT-50)	BT40 300~1000 mm BT50 200~900 mm		240~1140 mm		240~1140 mm	
	主軸中心至滑道面距離 Spindle Center to Column Slide Ways	520 mm	520mm	620 mm	620 mm	650 mm		850 mm		1050 mm		1050 mm	
SPINDLE 主軸	主軸錐孔 Spindle Taper	BT-40	BT-40	BT-40	BT-40	BT-40	BT-50	BT-40	BT-50	BT-40	BT-50	BT-40	BT-50
	主軸直徑 Spindle Diameter	Ø60 mm	Ø70 mm	Ø70 mm	Ø70 mm	Ø70 mm	Ø100 mm	Ø70 mm	Ø100 mm	Ø70 mm	Ø100 mm	Ø70 mm	Ø100 mm
	主軸轉速 Spindle Speed	10000 rpm(Belt)	10000 rpm(Belt)	10000 rpm	10000 rpm	10000 mm	6000 mm	10000 mm	6000 mm	10000 mm	6000 mm	10000 mm	6000 mm
FEEDRATE 快速移動	三軸滑道 3 axes Silde Ways	Box Way 硬軌	Box Way 硬軌	Box Way 硬軌	Box Way 硬軌	Box Way 硬軌		Box Way 硬軌		Box Way 硬軌		Box Way 硬軌	
	三軸快速移動率 3 axes Rapid Feedrate	20 m/min	20 m/min	20 m/min	20 m/min	X , Y : 20 m/min Z : 18 m/min		15 / 15 / 12 m/min		12 / 8 / 8 m/min		8 / 8 / 8 m/min	
	三軸切削進給速率 3 axes Cutting Feedrate	10 m/min	10 m/min	10 m/min	10 m/min	10 m/min		6 m/min		5 m/min		5 m/min	
ATC 儲刀倉	換刀機構 Tool Magazine type	刀臂式 / Arm type	刀臂式 / Arm type	刀臂式 / Arm type	刀臂式 / Arm type	刀臂式 / Arm type		刀臂式 / Arm type		刀臂式 / Arm type		刀臂式 / Arm type	
	刀具選擇 Tool Selection	雙向及最短路徑 Bi-direction shortest path	雙向及最短路徑 Bi-direction shortest path	雙向及最短路徑 Bi-direction shortest path	雙向及最短路徑 Bi-direction shortest path	雙向及最短路徑 Bi-direction shortest path		雙向及最短路徑 Bi-direction shortest path		雙向及最短路徑 Bi-direction shortest path		雙向及最短路徑 Bi-direction shortest path	
	相鄰刀最大直徑x長度 Max. Tool Diameter x Length	Ø76 x 250 mm	Ø76 x 250 mm	Ø76 x 250 mm	Ø76 x 250 mm	Ø76 x 250 mm	Ø105 x 300 mm	Ø76 x 250 mm	Ø105 x 300 mm	Ø76 x 300 mm	Ø105 x 300 mm	Ø76 x 300 mm	Ø105 x 300 mm
	刀具最大重量 Max. Tool Weight	7 kg	7 kg	7 kg	7 kg	7 kg	15 kg	7 kg	15 kg	7 kg	15 kg	7 kg	15 kg
	刀具刀柄規格 Tool Shank	BT-40	BT-40	BT-40	BT-40	BT-40	BT-50	BT-40	BT-50	BT-40	BT-50	BT-40	BT-50
	刀具容量 ATC Capacity	24T	24T	24T	24T	24T		24T/32T(opt.)		24T/32T(opt.)		24T/32T(opt.)	
MOTOR 驅動馬達	主軸驅動馬達(連續 / 30分) Spindle Motor (cont. / 30 min.)	5.5 / 7.5 kw	7.5 / 11 kw	7.5 / 11 kw	7.5 / 11 kw	11 kw/15 kw		15/18.5 kw		15/18.5 kw		15/18.5 kw	
	X , Y , Z 驅動馬達 X / Y / Z axis Servomotor	2 / 2 / 3.5 kw	2 / 2 / 3.5 kw	2 / 2 / 3.5 kw	2 / 2 / 3.5 kw	3.5 / 3.5 / 3.5 kw		4.5 / 4.5 / 4.5 kw		4.5 / 7 / 4.5 kw		4.5 / 7 / 4.5 kw	
	X , Y , Z 滾珠螺桿 X / Y / Z axis Ball Screw	Ø40	Ø40	Ø40	Ø40	Ø50		Ø50		X,Z : Ø50 , Y : Ø63		X,Z : Ø50 , Y : Ø63	
	切削水馬達 Coolant Pump	660 w	660 w	660 w	660 w	660 w		660 w		750 w		750 w	
MISCELLANEOUS 一般規格	外型尺寸 (長 x 寬 x 高) External Dimensions (L x W x H)	2100 x 2115 x 2621 mm	2025 x 2410 x 2798 mm	2810 x 2238 x 2580 mm 2870 x 2280 x 2550 mm	2810 x 2238 x 2580 mm 3130 x 2280 x 2550 mm	3220x2215x3040mm 4700 x 2500 x 3500 mm	3220x2215x3220 mm	4450 x 2945 x 3500 mm 4800 x 3200 x 3550 mm	20"FR	6000 x 3635 x 3740 mm 40" FR + 40" HQ		6600 x 3635 x 3740 mm 40" FR + 40" HQ	
	淨重 / 毛重 N.W / G.W (approx.)	3500 / 4000 kg	5000 / 5500 kg	6000 / 6700 kg	6200 / 6900 kg	9000 / 10000 kg (BT-40)	9500 / 10500 kg (BT-50)	16000 kg	17000 kg	24000 kg	26000 kg	26500 kg	28500 kg
	護罩 Splash Guard	全罩式 Fully Splash Guard	全罩式 Fully Splash Guard	全罩式 Fully Splash Guard	全罩式 Fully Splash Guard	全罩式 Fully Splash Guard		全罩式 Fully Splash Guard		全罩式 Fully Splash Guard		全罩式 Fully Splash Guard	
	水箱容量 Coolant Tank Capacity	200L	270L	240L	250L	280L		500L		600L		600L	

・由於本公司不斷的研究改進，本型錄所示機械規格特性本公司有變更之權利，恕不另行通知。 ・All specifications and design are subject to change without pruor notice.

/ STANDARD ACCESSORIES/ 標準配件

- Mitsubishi M80 controller
- 10.4" color LCD
- Leveling kits and blocks
- Tool box with tools
- Spindle speed 10000 rpm, Belt drive, BT-40 BMV-850/1000/1200/1600/2200/2500
- Spindle speed 6000 rpm, Belt drive, BT-50 BMV-1200 / 1600 / 2200 / 2500
- Spindle air blow system
- Coolant system
- Spindle oil cooler
- Auto power off
- Heat exchanger
- Auto lubrication system
- 24 tools Arm type ATC (BT-40 / BT-50)
- Rigid tapping
- Screw type chip conveyor with cart
- M code air blasting
- CF / USB Interface / RJ45
- Fully splash cover
- Working light
- Transformer (Export only)

- 三菱 M80 控制器
- 10.4"彩色螢幕
- 地基墊及水平調整螺絲
- 工具箱及工具
- 主軸轉速10000 rpm, 皮帶式, BT-40 BMV-850/1000/1200/1600/2200/2500
- 主軸轉速 6000 rpm, 皮帶式,BT-50 BMV-1200 / 1600 / 2200 / 2500
- 主軸鬆刀吹氣系統
- 切削液系統
- 主軸油冷機
- 自動斷電系統
- 熱交換器
- 自動潤滑單元
- 刀臂式24把刀 (BT-40 / BT-50)
- 剛性攻牙
- 螺旋排屑裝置 (含集屑車)
- M碼吹氣
- CF / USB介面 / RJ45
- 全罩式鈑金
- 工作燈
- 變壓器 (外銷專用)

/ OPTIONAL ACCESSORIES / 選購配備

- Fanuc 0iMF / Mitsubishi M800 / Siemens / Heidenhain
- 15" color LCD
- Spindle speed 12000 / 15000 rpm BT-40, DDS
- Spindle speed 8000 rpm BT-50, Belt drive
- ZF Gear Box (BT-40)
- Powerful Gear Head (BT-50)
- 4th axis interface (not include motor & drive)
- CNC rotary table with drive, motor
- Coolant through spindle 20 / 30 / 50 / 70 bar (CTS)
- Air conditioner for electric cabinet
- 32 tools Chain type ATC BT-50, (BMV-1600 / 2200 / 2500)
- Steelbelt type / Scraper type chip conveyor with cart
- Chip flushing system
- CE norm
- Oil skimmer
- Automatic tool length measuring device
- Automatic work piece measuring device
- Heidenhain 3 axes Linear scale
- Spindle curtain coolant

- 發那科0iMF / 三菱M800 / 西門子 / 海德漢 / 控制器
- 15" 彩色螢幕
- 主軸轉速 12000 / 15000 rpm BT-40,直結式
- 主軸轉速 8000 rpm BT-50, 皮帶式
- ZF齒輪箱 (BT-40)
- 強力齒輪頭 (BT-50)
- 第四軸介面 (不含馬達及驅動器)
- CNC第四軸分度盤含伺服器馬達
- 主軸中心出水 20 / 30 / 50 / 70 bar
- 電氣箱冷氣機
- 鏈條式32把刀 BT-50, (BMV-1600 / 2200 / 2500)
- 鏈板式 / 刮板式鐵屑輸送機含集屑車
- 高壓沖屑裝置
- CE標準
- 油水分離機
- 自動刀長量測
- 自動工件量測
- 海德漢 3軸光學尺
- 主軸環噴

/ MACHINE FLOOR PLAN 佔地面積示意圖

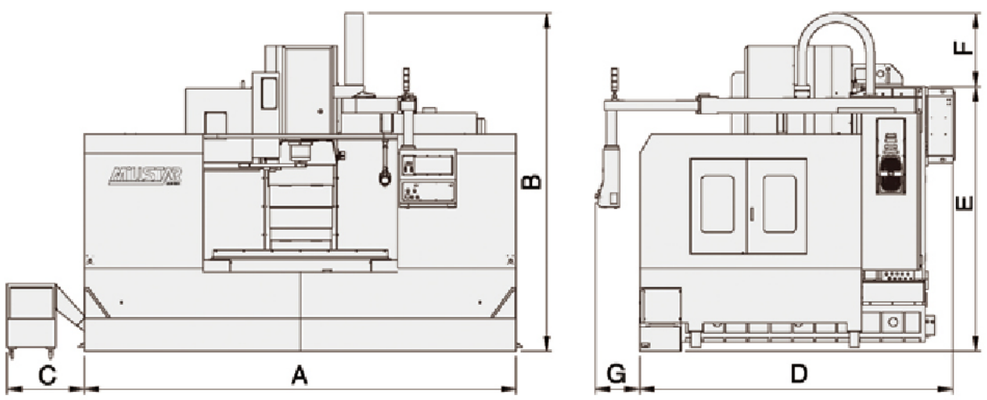

Model Dimension:

型號 \ 尺寸	單位	A	B	C	D	E	F	G
BV-60	mm	2100	2621	1039	2115	2045	576	/
BV-80	mm	2410	2798	1039	2410	2155	643	/
BMV-850	mm	2810	2580	800-1200	2238	2200	380	/
BMV-1000	mm	2810	2580	800-1200	2238	2200	380	/
BMV-1200	mm	3220	3040 (40#) 3220 (50#)	800-1200	2215	2490 (40#) 2810 (50#)	550 (40#) 410 (50#)	/
BMV-1600	mm	4450	3500	800-1200	2945	2750	750	432
BMV-2200	mm	6000	3740	800-1200	3635	3105	635	353
BMV-2500	mm	6600	3740	800-1200	3635	3105	635	275

・All machine floor plan data shown above subject to change without prior notice, Actual product specifications will be based on the delivery.
・由於本公司不斷的研究改進，本型錄所示之機械佔地面積圖規格本公司有變更之權利恕不另行通知，實際仍需以出貨為準。

MILSTAR JUNHEH BMV / BV 機台規格表 / 佔地面積 SPECIFICATIONS / MACHINE